BOLE 伯乐塑机
Injection Moulding Machine

咨询电话
400 777 6111

宁波双马机械工业有限公司
NINGBO SHUANGMA MACHINERY INDUSTRY CO., LTD.

地址：浙江宁波北仑纬三路99号
销售部电话：0574-86179688　86179588
传真：0574-86175878
售后服务电话：0574-86181111

ADD:NO.99 WEISAN ROAD,XIAOGANG,NINGBO,CHINA
TEL:+86-574-86188007
FAX:+86-574-86188008
P.C:315821

www.bole-machinery.com
E-mail:bole-sales@shuangma-machinery.com

MK系列

多组分注塑机

MK Series Multiple Injection Moulding Machine

BOLE 伯乐塑机
Injection Moulding Machine

MK系列多组分注塑机
MK series multiple injection moulding machine

伯乐多组分注塑机满足于汽车、家电、日用品、食品包装、玩具等行业对个性化产品与外观美的需求，以其优异的性能、卓越的品质助力广大用户提升核心竞争力！

With excellent performance and quality, BOLE MK series multiple IMM will better meet the demand of automobile、household appliances、daily necessities、food packing and toy industries for their appearance and personalized design and will help customers improve their core competitiveness.

精密
Precise

开合模位置重复精度±0.5mm
注射重量重复精度 3 ‰

Mold open & close positioning accuracy: ±0.5mm
Injection weight accuracy: 3‰

灵活
Flexible

根据制品的特点灵活多变的设置最优化的注塑工艺，确保制品品质

The injection molding progress is set according to the characteristics of product to ensure product quality.

节能
Energy saving

液压伺服系统，
节能环保，控制精度高

Hydraulic servo system has advantages of saving energy, protecting environment and high control accuracy.

省
Economy

经伯乐抽样调查，伯乐中心锁模结构相比传统内翻机器，可为80%以上的模具节省2%-5%的原料

After sample survey, BOLE central clamping toggle design can save 2-5% material for 80% of customers mold(comparing to Customer's molds clamping toggle design).

MK系列多组分注塑机
MK series multiple injection moulding machine

全国发明专利 中心锁模
Invention patent, central clamping toggle

拉杆脱离
Tie-bar detach

宽板转盘
Wide turntable

单缸射出结构
Single cylinder injection structure

稳定的下料口温度
Stable feeding zone temperature

高刚性机架
High rigidity frame

线性导轨
High precision & rigidity linear guide

标配伺服转盘系统
Standard with servo turntable system

德国设计的塑化系统
German designed plasticizing system

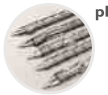

两个独立的单缸注射组成注射单元
The injection unit is composed by two independent single injection cylinder

伺服驱动锁模结构
Servo drive clamping structure

01 全国发明专利—中心锁模
Central Clamping Toggle, Invention Patent in China

外曲式与内曲式受力图解
Toggle System Comparison

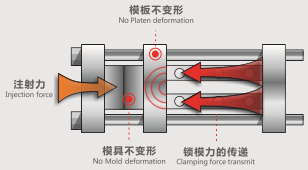

伯乐塑机中心受力
BOLE centre clamping structure

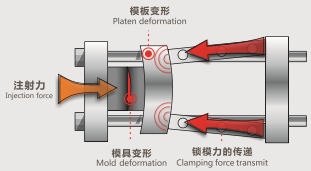

传统结构(其它品牌)
Traditional clamping structure

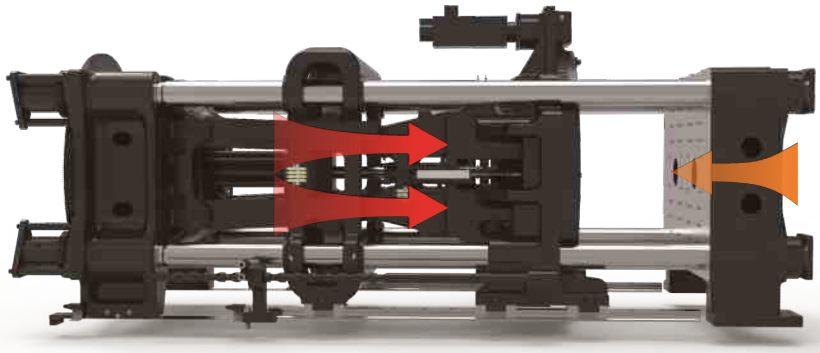

MK系列多组分注塑机十大优势
Ten Strengths of MK Series Injection Molding Machine

01 锁模力利用率高
High utilization of clamping force

经伯乐抽样调查，伯乐中心锁模结构锁模利用率达到100%，而传统内翻机器，锁模利用率只达到80-85%。

After sample survey, clamping force efficiency of BOLE central clamping toggle design can reach 100%, clamping force efficiency of traditional edge clamping force only can reach 80-85%.

02 省料
Material Saving

伯乐中心锁模结构相比传统内翻机器，可为80%以上的模具节省2%-5%的原料。

BOLE central clamping toggle design can save 2-5% material for 80% of customers mould (comparing to customer's molds clamping toggle design).

03 精度高、少飞边
High accuracy
Less possibility of flash

开合模定位重复精度±1mm
产品重量重复精度：≤0.5%
比传统结构更少飞边。

Repetitive positioning accuracy of mold opening & closing : ±1mm
Product weight repetitive accuracy : ≤0.5%
Less possibility of flash, and save flash trim process.

04 保护模板和模具
Offer better protection for molds and platens

最新合模结构，模板受力均匀，变形少；精准的合模低压功能，比例压力控制，等应力模板结构技术，能更好的保护模具，效延长模具寿命。

The latest design of clamping structure , averaged force and less distortion for mould platen. Precise low-pressure function for mould closing, proportional pressure control, iso-stress mould platen design, to extend mould life.

05 适合小模具
Suitable for small mould

最新合模结构，模板受力均匀，变形量减小，可适用大小模具，模具适用性广。

The latest clamping structure with less platen distortion, can bear averaged force and apply for the smaller molds.

06 开模行程大
Bigger opening stroke

相同吨位的机型，中心锁模结构，开模行程、顶出行程比同行大，方便安装更大模具(尤其深腔模具)。

Central clamping structure can provide bigger opening stroke & ejection stroke than other brands' stroke, and can install larger molds easier. (Especially for deep cavity working condition.)

MK系列多组分注塑机十大优势

Ten Strengths of MK Series Injection Molding Machine

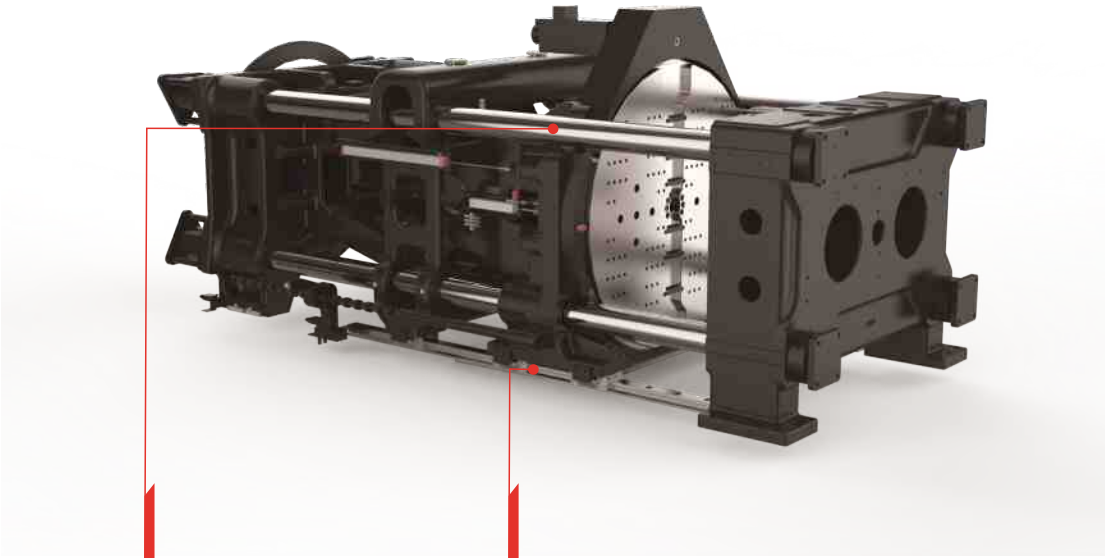

02 宽板转盘
Wide Turntable

模板采用宽板式设计，容模量大，模具适用范围广；满足客户订制化，功能多样。

With wide plate design, the mold volume is big and has a wide range of applications. Meanwhile, it also has variety of functions and can meet customers' specific needs.

03 标配伺服转盘系统
Standard with servo turntable system

转盘旋转快速、平稳、定位精准；操作方便无油压油温变动问题。

Turntable is fast, stable and precise in movement. Easy to operate. Stable in oil pressure and oil temperature.

05 拉杆脱离
Tie-bar detach

拉杆脱离，无需润滑，保证模区清洁；无需铜套，无磨损，精度恒定（170-450吨）。

Without lubrication on the connection between tie bars and platens, so clamping unit keeps clear. No copper bush to be wear out for machines from 170-450Ton.

04 线性导轨
Linear guide

采用高精度、高强度线轨配合滑脚支撑动模板，保证模板高平行度和重复定位精准度；线轨的低阻力、低能耗，可使开合模更平稳、快速，同时免除润滑油飞溅问题，使整机运行更平稳、快速。(170-450吨)

The moving plate slide foot adopts the linear guide to ensure the positioning accuracy . Because of the low resistance , faster opening and closing speed can be obtained, and the lubricating oil spatter can be avoided, so the performance of the whole machine is smoother and faster.(170-450Ton)

MK系列多组分注塑机十大优势

Ten Strengths of MK Series Injection Molding Machine

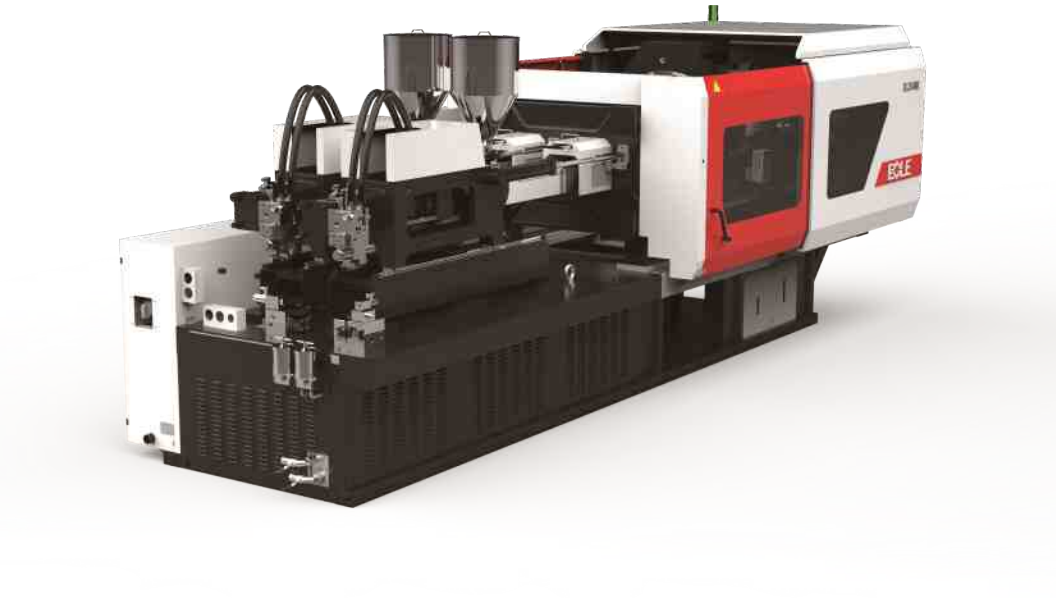

06 两个独立的单缸注射组成注射单元

Two sets of independent injection cylinders at Injection Unit

两个独立的单缸注射组成注射单元，根据用户需求可自由搭配。

Two sets of independent injection cylinders at injection unit, which can be matched according to customers' requirements.

07 单缸射出结构

Single injection cylinder structure

注射部分采用特殊单缸结构，注射活塞不随螺杆转动，无漏油风险。

Based on this special structure, the injection piston won't rotate together with screw to avoid the risk of oil leakage.

MK系列多组分注塑机十大优势

Ten Strengths of MK Series Injection Molding Machine

08 德国设计的塑化系统
Break-resisting tie bar

- 源自德国设计的塑化系统：塑化效率远超国内水平20%以上(ABS、PS、PP等常用塑料)；
- 可定制各种复杂工艺要求、各种应用要求的专用塑化系统；所有机型A\B\C螺杆长径比都采用23:1，以保证每一型螺杆都能达最佳塑化效果及塑化效率。
- Originate form Germany design Plasticizing System, efficiency excess above 20% of domestic level (Common plastics such as ABS, PS, PP, etc).
- Custom made complicated technical requirement, applied to special plasticizing system.
- All series can fit with A\B\C screw, L/D ratio 23:1, to achieve the best plasticizing effect and efficiency

09 稳定的下料口温度
Stable feeding zone temperature

将下料口温度纳入温度单元的闭环控制中，提升整个注射单元的效率与精度，同时避免因下料结块及不顺产生的注塑精度低的现象。

The feed throat temperature is brought into the closed loop control of the temperature unit, thus the efficiency and precision of the whole injection molding unit are improved. To avoid low injection accuracy due to inconsistency and caking.

10 高刚性机架
High rigidity frame

全系列机型采用高刚性机架，模块化设计和线性导轨支撑结构，机架水平偏差小，机械精度高。

All modes of MK adopt high-rigidity machine frame, linear guide and modular design to achieve better performance.

控制系统
Control Unit

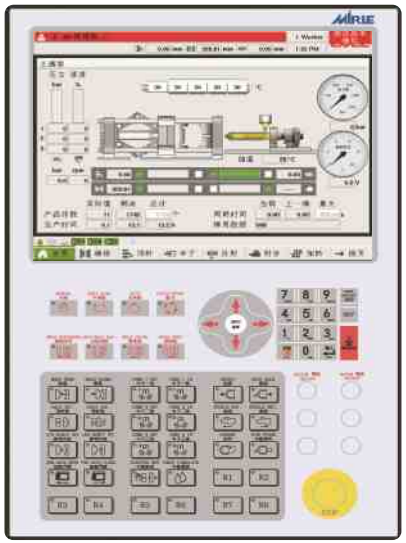

标配专用的盟立MXI系列电脑控制器
Standard with MIRLE's MXI series controller

15英寸触控一体式流线式面板
15 inch touch screen

1 硬体分散式结构设计
Modular design

I/O最大**160**点
温度最多**24**段
ADA最大**16**段

I/O with max. 160 points
Temperature control with max. 24 sections
ADA with max. 16 sections

2 控制响应速度
Speed for feedback and reaction

最快可达**0.5-1**ms
Extremely reach 0.5-1 ms

3 温度精度
Accuracy for temperature

最佳可达**±0.2**℃
The best it can reach ±0.2℃

应用领域
Application Area

汽车行业
Automobile industry

家电
Home appliance

日用品
Commodity industry

食品包装
Food packaging

工具
Tool

玩具
Toy industry

玩具
Toy industry

技术参数 Technical Data

项目 DESCRIPTION	UNIT	BL170MK								BL280MK								BL450MK								BL450MK								BL700MK							
国际标准规格 International specification		260				260				500				500				880				1300				880				1300				1300				1300			
螺杆规格	Screw specification	AA	A	B	C	AA	A	B	C	AA	A	B	C	AA	A	B	C	AA	A	B	C	AA	A	B	C	AA	A	B	C	AA	A	B	C	AA	A	B	C	AA	A	B	C
螺杆直径 Screw diameter	mm	25	28	32	36	25	28	32	36	32	36	40	45	32	36	40	45	40	45	50	55	45	50	55	60	40	45	50	55	45	50	55	60	45	50	55	60	45	50	55	60
螺杆长径比 Screw ratio	L/D ratio	20	23	23	23	20	23	23	23	20	23	23	23	20	23	23	23	20	23	23	23	20	23	23	23	20	23	23	23	20	23	23	23	20	23	23	23	20	23	23	23
理论注射容积 Theoretical injection capacity	cm^3	79	98	129	163	79	98	129	163	161	203	251	318	161	203	251	318	276	350	432	522	461	569	689	820	276	350	432	522	461	569	689	820	461	569	689	820	461	569	689	820
注射量 (以PS计) Shot weight (PS)	g	72	91	118	150	72	91	118	150	148	187	231	292	148	187	231	292	254	322	397	481	424	524	634	754	254	322	397	481	424	524	634	754	424	524	634	754	424	524	634	754
	oz	2.6	3.2	4.2	5.3	2.6	3.2	4.2	5.3	5.2	6.6	8.2	10.3	5.2	6.6	8.2	10.3	9.0	11.4	14.0	17.0	15.0	18.5	22.4	26.6	9.0	11.4	14.0	17.0	15.0	18.5	22.4	26.6	15.0	18.5	22.4	26.6	15.0	18.5	22.4	26.6
最大对空注射速率 Max. injection rate into Air	cm^3/s	72	91	118	150	72	91	118	150	98	124	154	194	98	124	154	194	155	196	242	293	207	256	309	368	155	196	242	293	207	256	309	368	207	256	309	368	207	256	309	368
注射压力 Injection pressure	Mpa	339	270	207	163	339	270	207	163	311	246	199	158	311	246	199	158	316	250	202	167	296	240	198	166	316	250	202	167	296	240	198	166	296	240	198	166	296	240	198	166
注射行程 Injection stroke	mm	160				160				200				200				220				290				220				290				290				290			
最大注射速度 Max. injection speed	mm/s	147				147				122				122				123				130				123				130				130				130			
最大螺杆转速 Max. screw speed	r/min	272				272				270				270				272				270				272				270				270				270			
锁模力 Clamping force	kN	1700								2800								4500								5500								7000							
开模行程 Opening stroke	mm	420								500								650								750								820							
拉杆内间距 Space between tie bar	mm x mm	700×450								950×550								1100×620								1200×660								1260×800							
模具定位中心距 Distance Between Molds Positing Centers	mm	400								500								550								650								650							
转盘直径 Diameter of Rotational Mold Adapter	mm	810								1050								1200								1340								1420							
最小模具厚度 (T型槽) Min. mould height	mm	150								180								220								280								320							
最大模具厚度 (T型槽) Max. mould height	mm	480								600								700								800								900							
最大模板距离 (T型槽) Max. distance Platen	mm	900								1100								1350								1550								1720							
顶出行程 Ejector stroke	mm	100								130								150								150								210							
顶出力 Ejector force forward	kN	31x2								31x2								62x2								62x2								113x2							
顶出杆数 Number of ejector bar	PCS	5x2								5x2								5x2								5x2								9x2							
系统压力 Sys. Pressure	Mpa	17.5				17.5				17.5				17.5				17.5				17.5				17.5				17.5				17.5				17.5			
电机功率 Pump Motor	kW	13				13				17				17				27				31				27				31				31				31			
电热功率 Heater power	kW	5	11	15	16	5	11	15	16	9	15	16	18	9	15	16	18	14	18	20	23	16	20	23	26	14	18	20	23	16	20	23	26	16	20	23	26	16	20	23	26
油箱容量 Oil tank capacity		250								350								500								500								600							

由于不断进行产品提升，本公司保留调整个别参数的权利，恕不另行通知。

Due to the continuous product improvement, we reserve the right to adjust the individual parameters, without notice.

二板机技术参数 Technical Data

项目 DESCRIPTION	UNIT	BL950DK/M								BL1100DK/M								BL1400DK/M								BL1700DK/M							
国际标准规格 International specification		3900				1300				3900				1300				3900				1300				3900				3900			
螺杆规格	Screw specification	AA	A	B	C	AA	A	B	C	AA	A	B	C	AA	A	B	C	AA	A	B	C	AA	A	B	C	AA	A	B	C	AA	A	B	C
螺杆直径 Screw diameter	mm	70	75	85	90	45	50	55	60	70	75	85	90	45	50	55	60	70	75	85	90	45	50	55	60	70	75	85	90	70	75	85	90
螺杆长径比 Screw ratio	L/D ratio	23	23	23	23	20	23	23	23	23	23	23	23	20	23	23	23	23	23	23	23	20	23	23	23	23	23	23	23	23	23	23	23
理论注射容积 Theoretical injection capacity	cm^3	1635	1877	2410	2702	461	569	689	820	1635	1877	2410	2702	461	569	689	820	1635	1877	2410	2702	461	569	689	820	1635	1877	2410	2702	1635	1877	2410	2702
注射量 (以PS计) Shot weight (PS)	g	1504	1727	2218	2486	424	524	634	754	1504	1727	2218	2486	424	524	634	754	1504	1727	2218	2486	424	524	634	754	1504	1727	2218	2486	1504	1727	2218	2486
	oz	53.1	61.0	78.4	87.9	15.0	18.5	22.4	26.6	53.1	61.0	78.4	87.9	15.0	18.5	22.4	26.6	53.1	61.0	78.4	87.9	15.0	18.5	22.4	26.6	53.1	61.0	78.4	87.9	53.1	61.0	78.4	87.9
最大对空注射速率 Max. injection rate into Air	cm^3/s	414	475	610	684	207	256	309	368	414	475	610	684	207	256	309	368	414	475	610	684	207	256	309	368	414	475	610	684	414	475	610	684
注射压力 Injection pressure	Mpa	241	210	164	146	296	240	198	166	241	210	164	146	296	240	198	166	241	210	164	146	296	240	198	166	241	210	164	146	241	210	164	146
注射行程 Injection stroke	mm	425				290				425				290				425				290				425				425			
最大注射速度 Max. injection speed	mm/s	108				130				108				130				108				130				108				108			
最大螺杆转速 Max. screw speed	r/min	139				270				139				270				139				270				139				139			
锁模力 Clamping force	kN	9500								11000								14000								17000							
开模行程 Opening stroke	mm	1480/830								1740/1020								2050/1350								2400/1530							
拉杆内间距 Space between tie bar	mm x mm	1160×1020								1260×1120								1420×1320								1620×1460							
模具定位中心距 Distance Between Molds Positing Centers	mm	710								710								710								710							
转盘直径 Diameter of Rotational Mold Adapter	mm	1540								1650								1980								2120							
最小模具厚度 (T型槽) Min. mould height	mm	330								330								500								510							
最大模具厚度 (T型槽) Max. mould height	mm	980								1070								1200								1380							
最大模板距离 (T型槽) Max. distance Platen	mm	1930								2220								2700								3080							
顶出行程 Ejector stroke	mm	130								120								150								200							
顶出力 Ejector force forward	kN	124x2								124x2								166x2								166x2							
顶出杆数 Number of ejector bar	PCS	5x2								5x2								9x2								9x2							
系统压力 Sys. Pressure	Mpa	17.5				17.5				17.5				17.5				17.5				17.5				17.5				17.5			
电机功率 Pump Motor	kW	13				31				13				31				13				31				13				31			
电热功率 Heater power	kW	28	33	37	42	16	20	23	26	28	33	37	42	16	20	23	26	28	33	37	42	16	20	23	26	28	33	37	42	28	33	37	42
油箱容量 Oil tank capacity		800								800								800								1000							

由于不断进行产品提升，本公司保留调整个别参数的权利，恕不另行通知。
Due to the continuous product improvement, we reserve the right to adjust the individual parameters, without notice.