HK系列

BOLE 伯乐塑机
Injection Moulding Machine

咨询电话
400 777 6111

宁波双马机械工业有限公司
NINGBO SHUANGMA MACHINERY INDUSTRY CO., LTD.

地址：浙江宁波北仑纬三路99号
销售部电话：0574-86179688　86179588
传真：0574-86175878
售后服务电话：0574-86181111

ADD:NO.99 WEISAN ROAD,XIAOGANG,NINGBO,CHINA
TEL:+86-574-86188007
FAX:+86-574-86188008
P.C:315821

www.bole-machinery.com
E-mail:bole-sales@shuangma-machinery.com

本手册受版权法保护。未经版权法明确许可的任何使用均需事先得到双马公司批准。
本手册为2018年4月印刷版本，之前印发的双马公司产品样本为无效版本。
个别插图和信息可能与实际交付的机器不同。

THIS CATALOGUE ARE PROTECT BY LAW OF COPY RIGHT.
ANY USE WITHOUT THE EXPRESS PERMISSION OF THE LAW OF COPY RIGHT, MUST GET APPROVAL OF SHUANGMA IN ADVANCE.
THIS VERSION WAS PRINTED IN APRIL 2018,
ANY DIFFERENCE SPECIFICATION FROM OLD VERSION SHOULD BE SUBLECT TO THIS VERSION.

HK系列
快速机
HK Series High Speed Machine

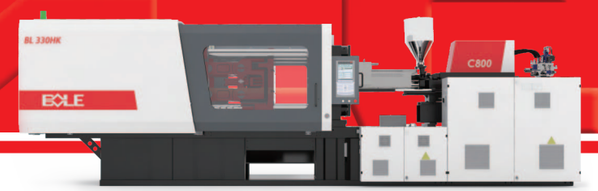

BOLE 伯乐塑机
Injection Moulding Machine

快速机
HK Series High Speed Machine

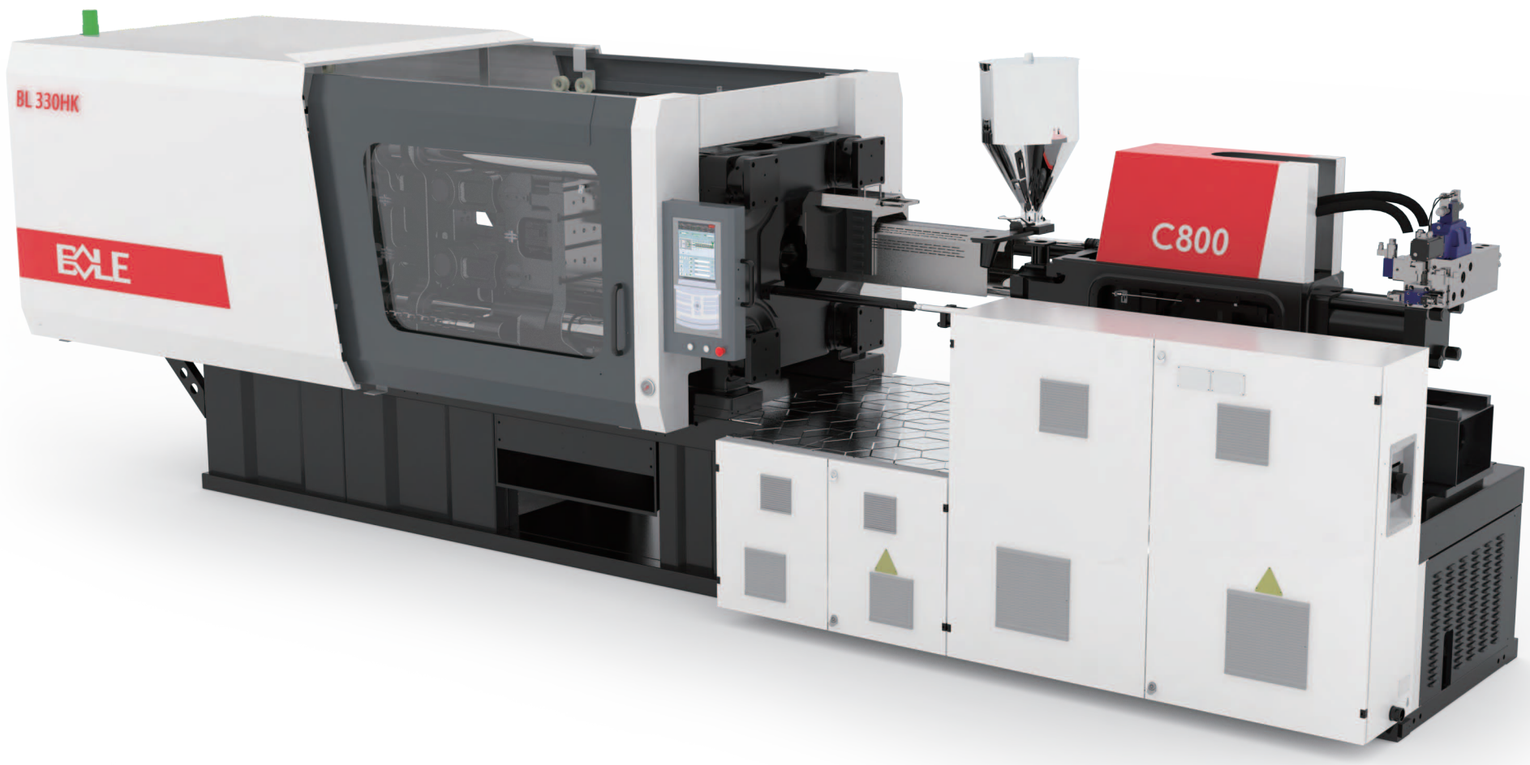

- **节能 ENERGY**
  能量转换高效，进一步节省能源
  High energy conversion efficiency, more energy saving.

- **高效 EFFICIENT**
  多种同步动作，实现最短的成型周期
  Synchronous machine movement is possible to achieve a short cycle time

- **精密 PRECISION**
  高达0.01mm级别的高定位精度，保证产品质量
  (选配电动锁模)
  Up to 0.01mm high position control accuracy, ensure product quality
  (Optional electrical mould-clamping function)

- **高速 HIGH SPEED**
  实现高射速，满足薄壁、包装等特殊产品的成型需求
  High speed to meet thin-wall and package special product molding requirement.

- **安静 QUIET**
  低噪音，工作环境更舒适
  Low noise level, create comfortable environment

锁模单元
Clamping Unit

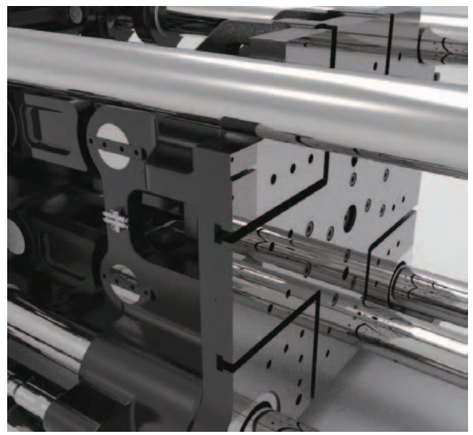

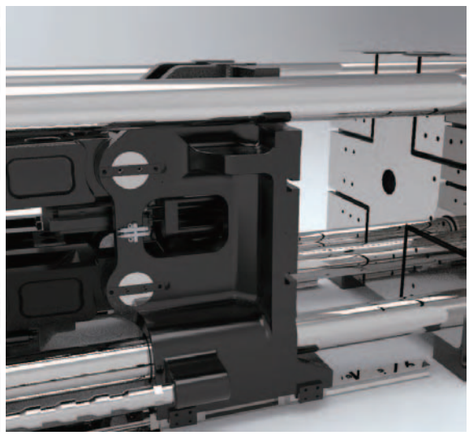

- HK全系列采用中心锁模结构及优化的连杆参数，开合模运行平稳
  HK whole series machine with central clamping structure and optimized toggle design, mould open and close are very stable.

- 锁模机构在标准机型基础上，模板刚性、拉杆刚性、机架刚性提升100%，以保证机器使用寿命
  Based on standard structure, HK clamping structure will be improved by 100% on mould platen rigidity, tie bar rigidity and frame rigidity.

- HK锁模部分、注射部分全系列采用线性导轨结构
  HK whole series machine's clamping unit and injection unit are with linear guide structure.

全国发明专利 中心锁模
Central locking toggle, inventional patent in China

(专利号: ZL2011 10250342.5)
(Patent No.: ZL2011 10250342.5)

外曲式与内曲式受力图解
Toggle System Comparison

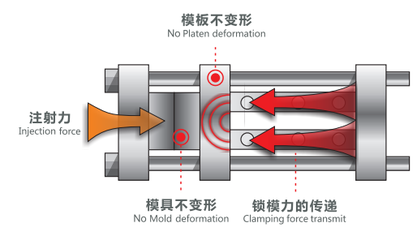

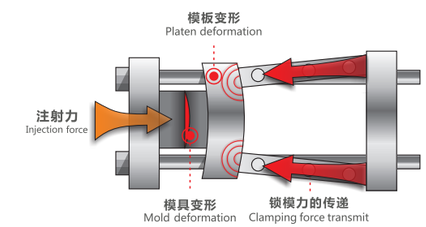

BOLE

伯乐塑机中心受力
BOLE centre clamping structure

- **100%**
  锁模力利用率
  Clamping force efficiency

- **2-5%**
  原料节省
  Material saving

- 减少模具磨损和模板变形
  Reduces mold wear, platen deflection

- 比传统结构更少飞边
  Less possibility of flash, save flash trim work

Others

传统结构(其它品牌)
Tradition Toggle system

- **80-85%**
  锁模力利用率
  Clamping force efficiency

- 动模板会变形，造成飞边浪费人力和材料。
  Moving platen with obvious deformation, cause flashes, waste of material and labor of trim the flashes.

注射单元
Injection Unit

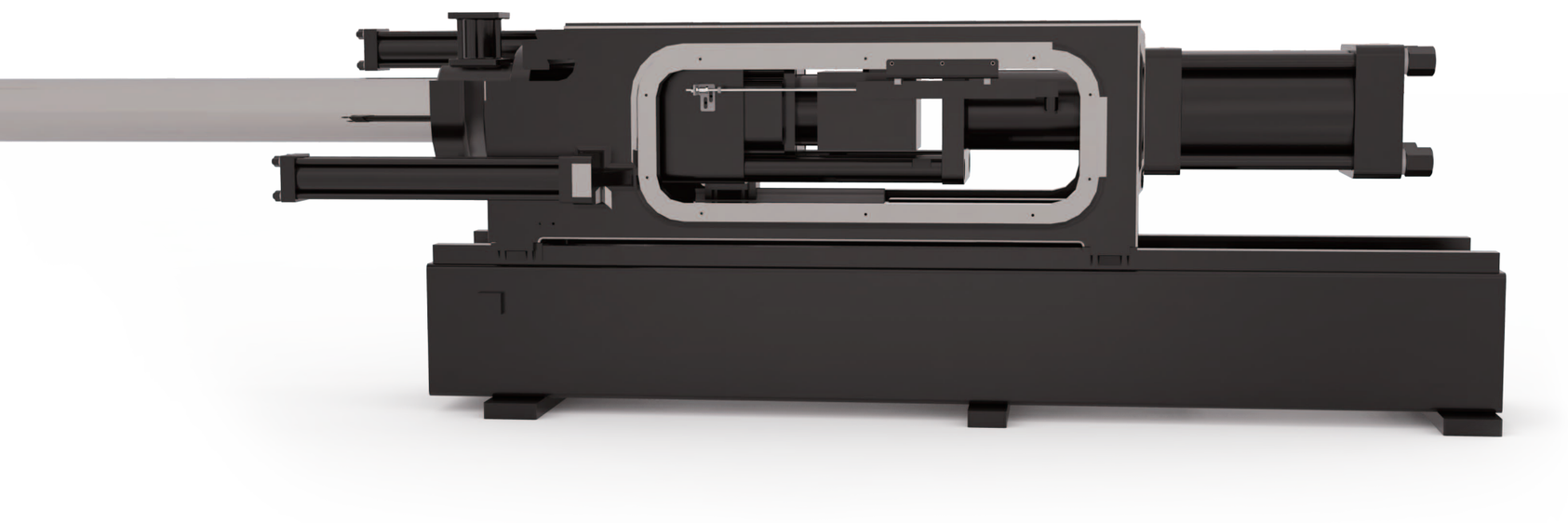

德国设计的塑化系统
German designed plasticizing system

- 源自德国设计的塑化系统：塑化效率远超国内水平20%以上
  Originate form Germany design Plasticizing System, efficiency excess above 20% of domestic level
- 可定制各种复杂工艺要求、各种应用要求的专用塑化系统。
  Custom made complicated technical requirement, applied to special plasticizing system
- 专用螺杆设计，以保证达到最佳塑化效果及塑化效率。
  Screw for special design purposes,to achieve the best plasticizing effect and efficiency

- HK注射部分采用特殊单缸结构，注射活塞不随螺杆转动，无漏油风险；
  HK injection unit is with special single injection cylinder design and injection rod is not rotating with screw, which will be no oil leakage risk.
- 注射速度机型需求匹配，350mm/s到600mm/s，
  完全满足目前包装行业及扎带行业要求
  HK injection speed is from 350mm/s to 600mm/s, which can meet the package and zip tie molding requirement.

控制系统
Control Unit

12
Inches | 英寸

I/O
Module | 模块

PC
Port | 端口

4.0
Germany | 德国

XFC
Control | 极控

0.01
Precision | 精密

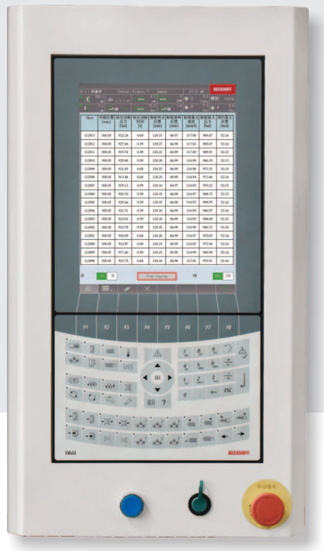

- 全系列标配德国原装进口BECKHOFF控制器，响应速度达12.5ms
  HK whole series machine is equipped with BECHHOFF controller, which is imported from German.The response time is 12.5ms.
- 基于PC的控制平台，采用Windows®系统，操作方便，易于扩展。
  PC-based control platform, windows system, easy operation, easy to be extended.
- 独有的XFC极速控制技术，能够有效减少原料消耗，提高成型产品质量。
  Unique XFC topspeed control technology, can reduce the materials consumption properly, improve the product quality.
- EtherCAT 现场总线系统，配置具实时特性的超高速 I/O 模块。
  EtherCAT fieldbus control system, utilize superspeed I/O module with real time function.
- 德国工业4.0标准，易于实现的智能制造技术。
  Germany industry 4.0 standard, intelligent manufacturing technology which is easy to implement.
- 标配SM第三代低惯量伺服系统，响应时间最快达35ms，节能高达50%
  Equipped with SM third generation low inertia servo system, minimum response time can be 35ms and save energy 50%.

- 标配多级顶出功能，可实现脉冲顶出。
  Equipped with mulit-grade ejector function, and also can be with pulse ejector.

应用领域
Application

- 广泛运用于包装、快速消费品、医疗等行业，特别适合薄壁短周期类产品。
  Widely used in packaging, fast moving consumer goods, medical and other industries, especially for thinwall short cycle products.

技术参数 Technical Data

		BL330HK/C800		BL420HK/C1000		BL550HK/C1300	
国际标准规格 International specification		3300/C800		4200/C1000		5500/C1300	
螺杆规格 Screw Specification		A	B	A	B	A	B
螺杆直径 Screw Diameter	mm	50	55	55	60	60	65
螺杆长径比 Screw ratio		25.3	23	25.1	23	24.9	23
理论注射容积 Theoretical injection capacity	cm^3	432	522	570	678	735	862
注射量(PS) Shot Weight Ps	g	397	481	524	624	676	793
	oz	14.0	17.0	18.5	22.0	23.9	28.0
最大对空注射速率 Injection rate into Air	cm^3/s	746	902	1069	1272	1696	1990
注射压力 Injection Pressure	MPa	185	153	181	152	178	151
注射行程 Screw Stroke	mm	220	220	240	240	260	260
最大注射速度 Max. Injection Piston Speed	mm/s	380	380	450	450	600	600
最大螺杆转速 Screw Speed	r/min	300	300	250	250	200	200
锁模力 Clamping Force	kN	3300		4200		5500	
开模行程 Opening Stroke Max	mm	600		660		750	
拉杆内间距（H×V） Tie-bar Distance （h×v）	mmXmm	660X610		710X650		860X710	
最小模具厚度 Mold Height Min	mm	250		270		270	
最大模具厚度 Mold Height Max	mm	600		680		880	
最大模板距离 Max Daylight	mm	1200		1340		1630	
顶出行程 Ejector Stroke	mm	150		180		210	
顶出力 Ejector Force	kN	62		62		113	
顶针回缩力 Ejector force back	kN	36		36		75	
顶出杆数 Number of ejector rods	PC	13		13		13	
系统压力 Sys. Pressure	MPa	16.0		16.0		16.0	
电机功率 Pump Motor	kW	40+40		40+18		40+22	
电热功率 Heater power	kW	19		24		28	
温控区数 Number of temp. control zones		5+1		6+1		6+1	
料斗容积 Hoper capacity	kg	50		50		50	
油箱容量 Oil tank capacity	L	500		550		600	
机械外形尺寸(约)(L×W×H) Machine dimensions(LXWXH)	mXmXm	7.2X1.8X2.2		7.9X1.85X2.3		8.6X2.2X2.6	
机器重量(约) Net weight(appro.)	ton	13		16		24	

由于不断进行产品提升，本公司保留调整个别参数的权利，恕不另行通知。
Due to the continuous product improvement, we reserve the right to adjust the individual parameters, without notice.

由于不断进行产品提升，本公司保留调整个别参数的权利，恕不另行通知。
Due to the continuous product improvement, we reserve the right to adjust the individual parameters, without notice.